LITB In-Tank Filter / Breather

LITB-20, 40

Specifications

- Working pressure 150 PSI (7 Bar)
- Operating Temperatures -22°F to +212°F (-32C to +100C)
- Flows to 40 GPM (150 LPM) return
- 1/2", 3/4", 1" Ports
- 10 or 40 micron breathers
- Aluminum casting, nylon lid
- Buna Seals
- Compatible with mineral oils HH, HL, HM, HR, HV, HG, water based according to ISO 6743/4
- Three nylon bowl lengths
- 3-10 (lbs.), 1.4 - 4.5 (kgs.) shipping weight
- 25 PSID. bypass for return

Options

- NPT or SAE Ports
- 6, 10, 25 micron cellulose, synthetic elements
- Visual or electrical indicators
- Dipsticks available

LITB-20

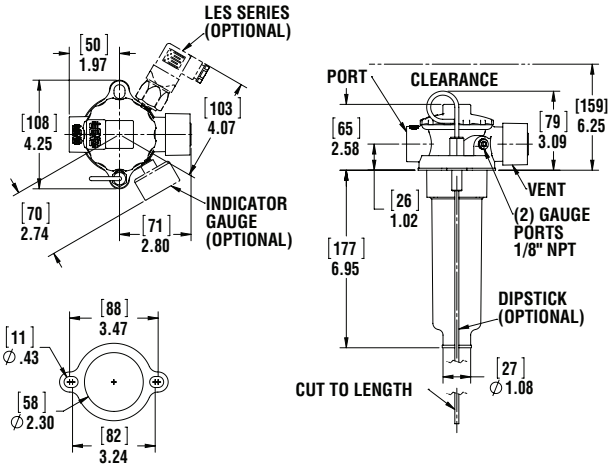

LITB-40

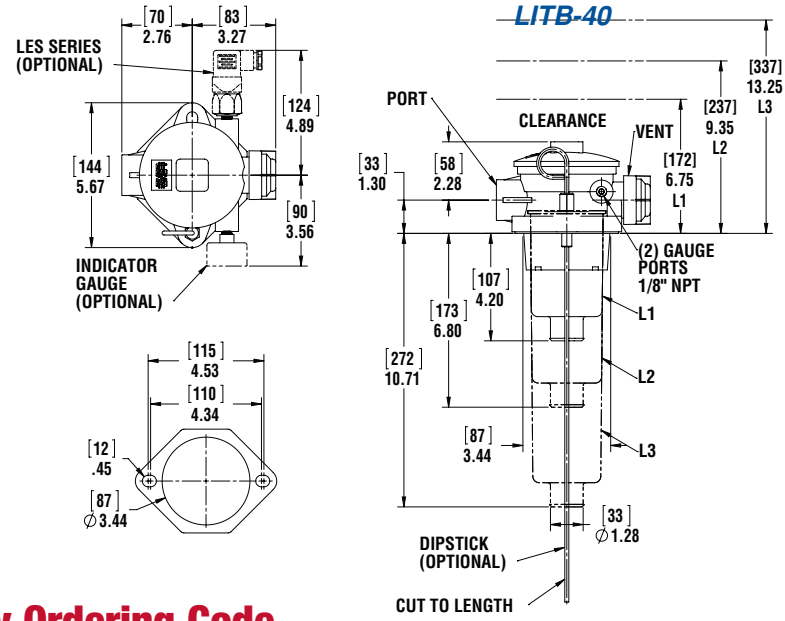

Assembly Ordering Code

LITB-20 — 500 — 10 — 40 — D — T

Series
LITB-20
LITBA-20

Port Size	
500	1/2"
750	3/4"

Media	
10	10 Micron Cellulose
10SYN	10 Micron Synthetic
25	25 Micron Cellulose
25SYN	25 Micron Synthetic

Breather	
10	10 Micron
40	40 Micron

Options	
D	Dipstick
	Omit

NOTE: Indicators Page 34a

Ind. Ports	
Omit	None
T	1/8 NPT Return

Indicating Gauges	
(T)	MC-20
(T)	CP-2
(T)	CP-2
(T)	LES-P2

**Indicators ordered and shipped separately*

Replacement Elements

Element	Area Media	Area in	cm	Beta	Ratio
LITE-20-10P	10 Micron Cellulose	135	870	B10	2
LITE-20-10SYN	10 Micron Synthetic	110	710	B10	75

Element	Area Media	Area In.	Cm	Beta	Ratio
LITE-20-25P	25 Micron Cellulose	110	710	B25	75
LITE-20-25SYN	25 Micron Synthetic	135	870	B25	2

See Technical Bulletin TB.FIL09.708, TB.FIL11.708, TB.FIL20.708, TB.FIL22.708, for further information at (Technical Data – www.lenzinc.com)

Phone: 937/277-9364 FAX: 937/277-6516 www.lenzinc.com

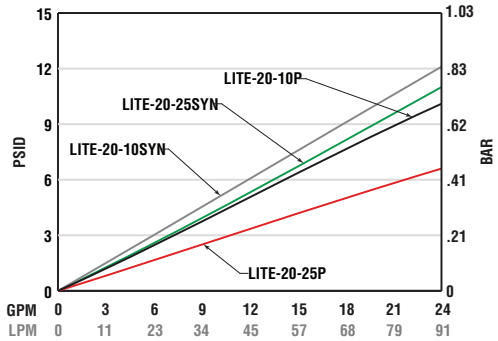

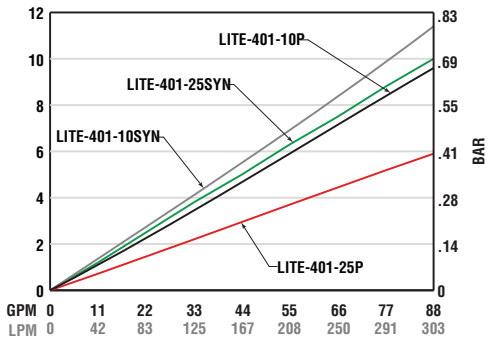

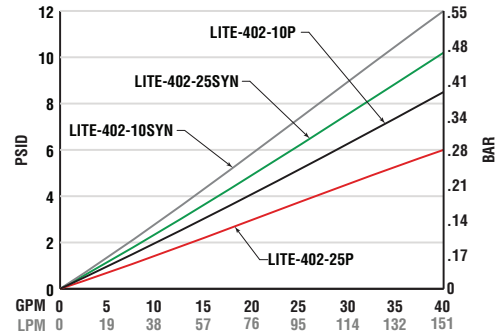

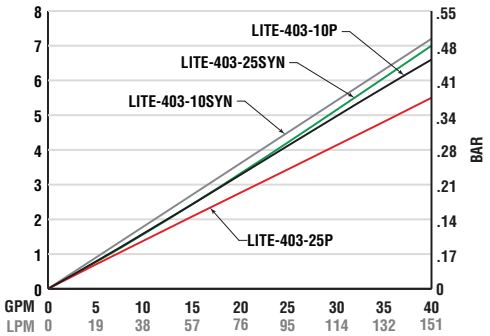

Temperature 100° F Viscosity 150 SUS
Average pressure drop through clean assembly

Assembly Ordering Code

LITB-40 — 1 — 750 — 10 — 40 — D — T

Series	
LITB-40	NPT
LITBA-40	SAE

Bowl Length	
1	4.3" Long
2	6.9" Long
3	10.8" Long

Port Size	
750	3/4"
1000	1"

Media	
10	10 Mic. Cellulose
10SYN	10 Mic. Synthetic
25	25 Mic. Cellulose
25SYN	25 Mic. Synthetic

Breather	
10	10 Micron
40	40 Micron

Options	
D	Dipstick
	Omit

Ind. Ports	
Omit	None
T	1/8 Npt Return

For indicator gauge specifications and ordering information see pages 38a-39a

**Indicators ordered and shipped separateley*

Replacement Elements

	ELEMENT NUMBER	MEDIA	in	CM	B= 2/20/75	DIRT HOLDING
4.3" Bowl Length	LITE-20-10	10 Micron Cellulose	190	1226	9µ/22µ/24µ	6
	LITE-20-25	25 Micron Cellulose	190	1226	29µ/46µ/54µ	8
	LITE-20-10SYN	10 Micron Synthentic	167	1077	4µ/10µ/12µ	10
	LITE-20-25SYN	25 Micron Synthentic	167	1077	8µ/25µ/32µ	12
6.9" Bowl Length	LITE-401-10	10 Micron Cellulose	242	1561	9µ/22µ/24µ	7
	LITE-401-25	25 Micron Cellulose	242	1561	29µ/46µ/54µ	10
	LITE-401-10SYN	10 Micron Synthentic	164	1058	4µ/10µ/12µ	10
	LITE-401-25SYN	25 Micron Synthentic	164	1058	8µ/25µ/32µ	12
10.8" Bowl Length	LITE-402-10	10 Micron Cellulose	367	2368	9µ/22µ/24µ	11
	LITE-402-25	25 Micron Cellulose	367	2368	29µ/46µ/54µ	15
	LITE-402-10SYN	10 Micron Synthentic	249	1607	4µ/10µ/12µ	15
	LITE-402-25SYN	25 Micron Synthentic	249	1607	8µ/25µ/32µ	17
	LITE-403-10	10 Micron Cellulose	606	3910	9µ/22µ/24µ	18
	LITE-403-25	25 Micron Cellulose	606	3910	29µ/46µ/54µ	24
	LITE-403-10SYN	10 Micron Synthentic	424	2736	4µ/10µ/12µ	25
	LITE-403-25SYN	25 Micron Synthentic	424	2736	8µ/25µ/32µ	30

Beta Rating of 2 = 50% Efficiency
Beta Rating of 20 = 95% Efficiency
Beta Rating of 75 = 98.7% Efficiency
Note: 45 PSI Pressure Drop Maximum

General Filter Specifications

LIT-1252-Bypass

LIT-1252-10P

CP-752-10

Bypasses

Differential opening set value + - 10%

Medias

Cellulose	Resin impregnated paper
Synthetic	Inorganic micro fiber
Wire Mesh	140 micron, 100 mesh stainless Steel
Water Removal	10 micron resin impregnated paper

Compatibility of Fluids with Filter Heads & Bowls Per ISO 6743/4

Mineral oils (types HH, HL, HM, HR, HV)
Water based emulsions (types HFAE, HFAS)
Synthetic fluids (types HS, HFDR, HFDS, HFFU)
Water glycol (types HFC)

Compatibility of Fluids with Filter Elements Per ISO 2943

Mineral oils (types HH, HL, HM, HR, HV, HG) ISO 6743/4
Synthetic fluids (types A & M series only)
Water based emulsions consult Lenz for further information

Compatibilty of Fluids with Seals Per ISO 6743/4

Nitrile (Buna N)

Mineral Oils (HH, HL, HM, HR, HV, HG)
Water emulsion (HFAE, HFAS)
Water glycol (HFC)

Viton seals

Synthetic fluids (types HS, HFDR, HFDS, HFDU)

Indicator Options

Visual	Suction & return visual gauges
Electrical	Suction & return electrical switches
Differential	Return indicators

Mineral Oil Types

HH	Non inhibited refined mineral oils
HL	Refined mineral oils with anti-oxidation and anti-rust properties
HM	HL fluids with improved anti wear
HR	HL oils with VI improvers
HV	Lubricants with high viscosity
HG	HM oils with anti-stick slip properties

Water Based Emulsion Types

HFAE	Oil water emulsions or aqueous fluids which are further with additional letters
HFAS	Solutions of chemicals containing minimum 80% of water
HFC	Aqueous solutions with viscosity-increasing additives and minimum 35% mass water

Synthetic Fluid Types

HFDU	Fire resistant fluids of other compositions
HFDS	HFD based upon phosphoric acid ester
HS	Synthetic fluids with no specific fire resistant properties
HFDR	HFD based on halogen-containing compounds

2" Diameter Filter Indicating Gauges

MC-12
Return Line Indicating Gauge
for 15 PSI Filter Applications
2" Multi color

0-12 PSI Green
12-15 PSI Yellow
15-60 PSI Red (Service Filter)
(To be used with "T" Indicator Port Location)

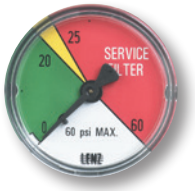

MC-20
Return Line Indicating Gauge
for 25 PSI Filter Applications
2" Multi color

0-20 PSI Green
21-24 PSI Yellow
25-60 PSI Red (Service Filter)

(To be used with "T" Indicator Port Location)

CP-2
Compound Indicating Gauge
(Suction or Return Line)

10" to 30" Vacuum is a Red Danger Area.
0-60 PSI
A Red "Change Filter" Sticker for the Pressure side is included with each gauge for application after the pressure factor is determined.
(To be used with "T" or "S" Indicator Port Location)

GLY-MC-20
Glycerin Filled
Return Line Indicating Gauge
for 25 PSI Filter Applications
2" Multi color

0-20 PSI Green
21-24 PSI Yellow
25-60 PSI Red (Service Filter)
(To be used with "T" Indicator Port Location)

135080
Suction Line Indicating Gauge for
5 PSI vacuum filter application
2" Multi color

0-9" HG Green
9-11" HG Yellow
11-30" HG Red (Service Filter)
(To be used with "S" Indicator Port Location)

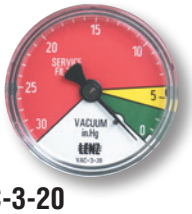

VAC-3-20
Suction Line Indicating Gauge
for 3 PSI vacuum filter applications
2" Multi color

0-3" HG Green
4-6" HG Yellow
6-30" HG Red (Service Filter)
(To be used with "S" Indicator Port Location)

Differential Indicator DP-75
Simple differential sliding indicator which changes from green to red at 7 PSID.

0 - 7 PSID. Green Clean
7 - 10 PSID. Red Service Filter
CP Series (500, 750, 1010, 1280, 1580)

**Indicators ordered and shipped separateley*

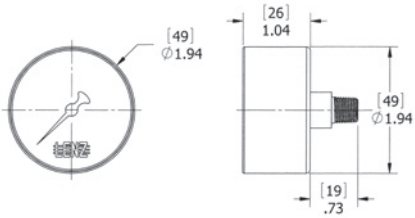

DIAL INDICATOR

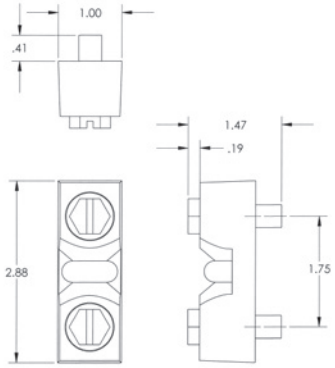

DP-75

Phone: 937/277-9364 FAX: 937/277-6516 www.lenzinc.com

Electrical Filter Indicators

Field Adjustable

Specifications:

- 1/8 NPT connection
- 3 AMP 12/24 VDC, 125/250 VAC IP67
- +/- 2% repeatability of full set point range @ 70°F
- Operating temperature 40°F to +250°F (-40°C to 121°C)
- 1,000,000 cycles mechanical range
- Maximum pressure 500 (25 BAR) PSI
- Steel housing, zinc plated
- Buna N diaphragm
- SPDT snap action switch

Options:

- EPDM seals -10°F – 250°F (-23°C – 121°C)
- Viton seals 0 – 250°F (-18°C – 121°C)
- Flying leads

LES-FL

LES-HC

Model	Adjustment Range	Average Differential	Set Pressure
P1	3-20 PSI (.2-1.4 BAR)	2-5 PSI (.13-0.4 BAR)	15 PSI
P2	15-80 PSI (1.03-6 BAR)	4-7 PSI (.27-0.5 BAR)	22 PSI
V1	5-28 in Hg (160-948mb)	2-4 INHg (67-135mb)	5 Hg

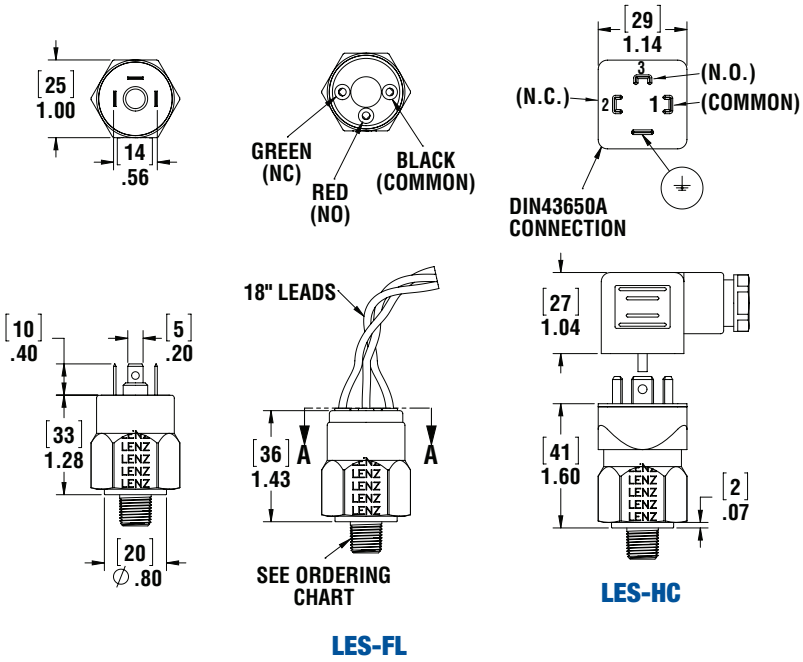

LES-FL

LES-HC

Switch Ordering Code

LES — P1 — 2N — B — HC —

Series
LES

Adjustment Range	
P1	3-20 PSI
P2	15-80 PSI
V1	5-30" HG
	Rising

Thread	
2N	1/8" NPT
4N	1/4" NPT
4S	7/16"-20
6S	9/16"-18

Seals	
B	Buna
V	Viton
E	EPDM

Electrical Connection	
FL	Flying Leads
HC	Din Clamp

Options	
Omit	
SS	Stainless Housing
IL	Ind Light

**Indicators ordered and shipped separateley*

Switch can be used in AC or DC Service.
For other options consult factory.
Switch does not indicate differential pressure

See Technical Bulletin TB.FIL23.912, or further information at (Technical Data – www.lenzinc.com)